Digital Electronic Circuits (EC2L004)

Lecture 15: Counters

Learning Objectives

- Counters
  - Introduction: Counters
  - Asynchronous (Ripple) Counters
  - Asynchronous Counters with MOD number < 2^n
  - Asynchronous Down Counters
  - Synchronous (Parallel) Counters
  - Up/Down Synchronous Counters
  - Designing Synchronous Counters
  - Decoding A Counter
  - Counters with Parallel Load
  - Cascading Asynchronous/Synchronous Counters

Introduction: Counters

- Counters are circuits that cycle through a specified number of states.

- Two types of counters:
  - synchronous (parallel) counters
  - asynchronous (ripple) counters

- Ripple counters allow some flip-flop outputs to be used as a source of clock for other flip-flops.

- Synchronous counters apply the same clock to all flip-flops.

Asynchronous (Ripple) Counters

- Asynchronous counters: the flip-flops do not change states at the same time as they do not have a common clock pulse.

- Also known as ripple counters, as the input clock pulse "ripples" through the counter – cumulative delay is a drawback.

- *n* flip-flops $\rightarrow$ a MOD (modulus) 2^n counter. (Note: A MOD-x counter cycles through x states.)

- Output of the last flip-flop (MSB) divides the input clock frequency by the MOD number of the counter; hence a counter is also a frequency divider.

Asynchronous (Ripple) Counters

- Example: 2-bit ripple binary counter.
- Output of one flip-flop is connected to the clock input of the next more-significant flip-flop.

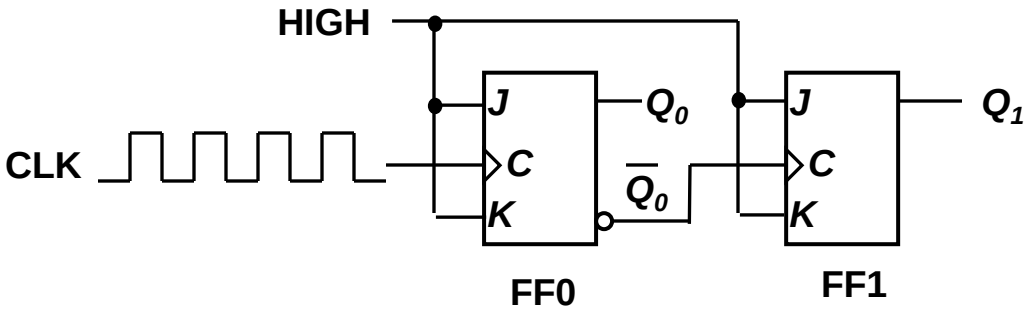

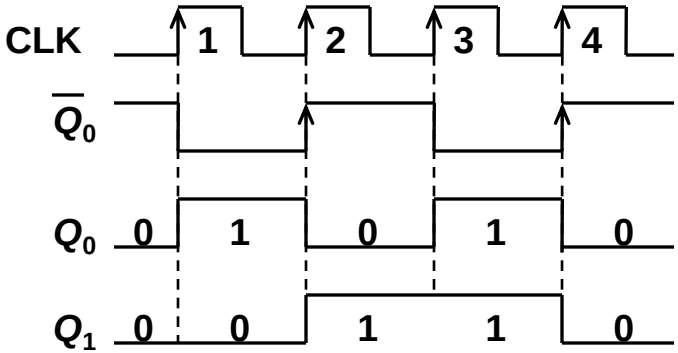

Timing diagram

$00 \rightarrow 01 \rightarrow 10 \rightarrow 11 \rightarrow 00$ ...

Asynchronous (Ripple) Counters

- Example: 3-bit ripple binary counter.

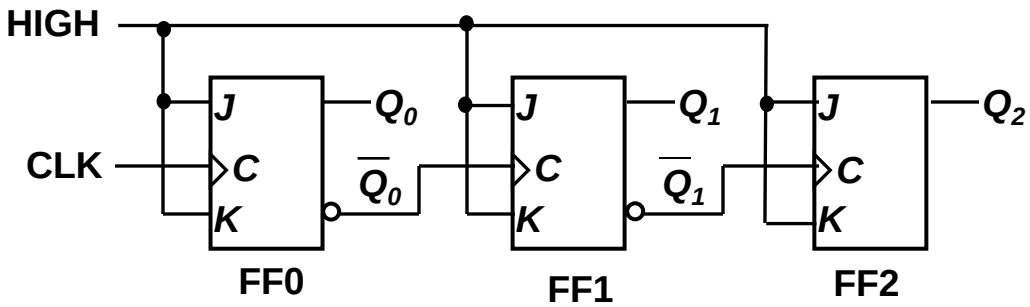

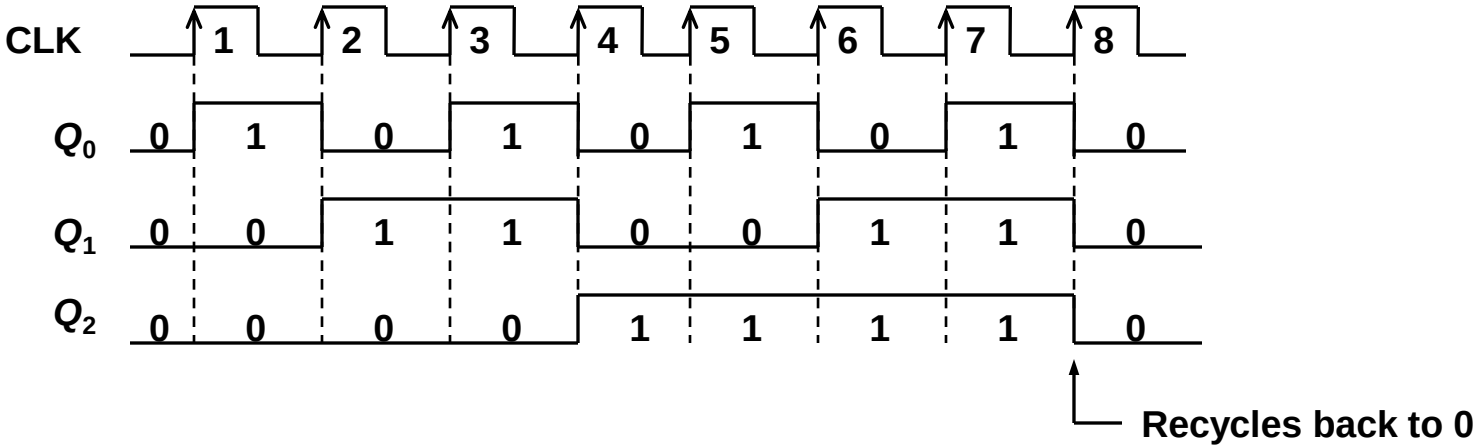

Asynchronous (Ripple) Counters

- Propagation delays in an asynchronous (ripple-clocked) binary counter.
- If the accumulated delay is greater than the clock pulse, some counter states may be misrepresented!

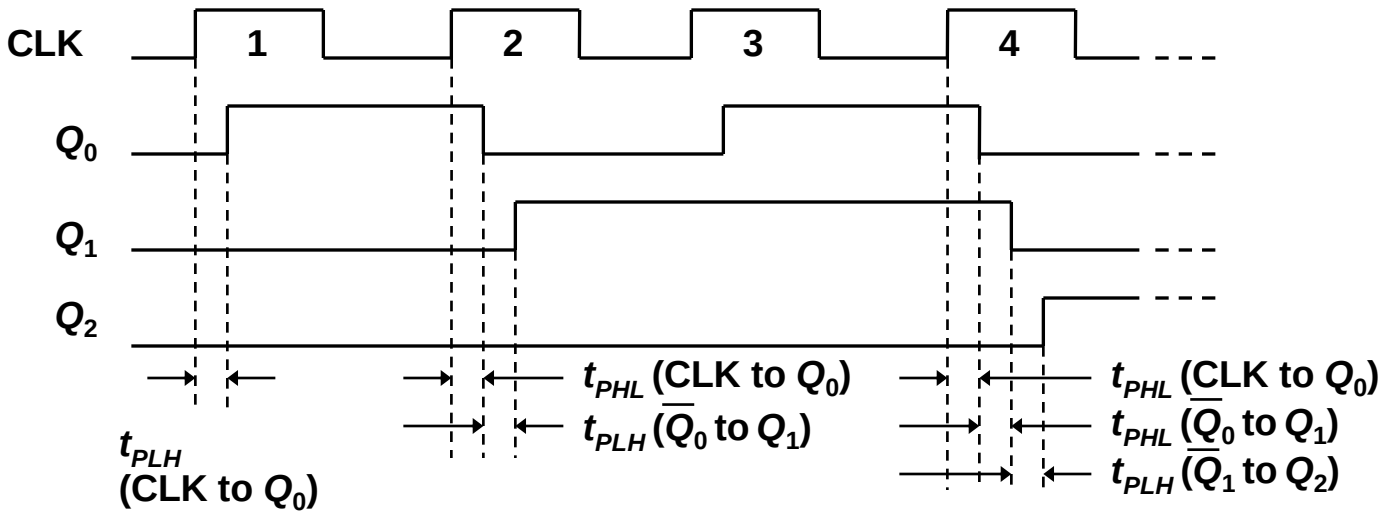

Asynchronous (Ripple) Counters

- Example: 4-bit ripple binary counter (negative-edge triggered).

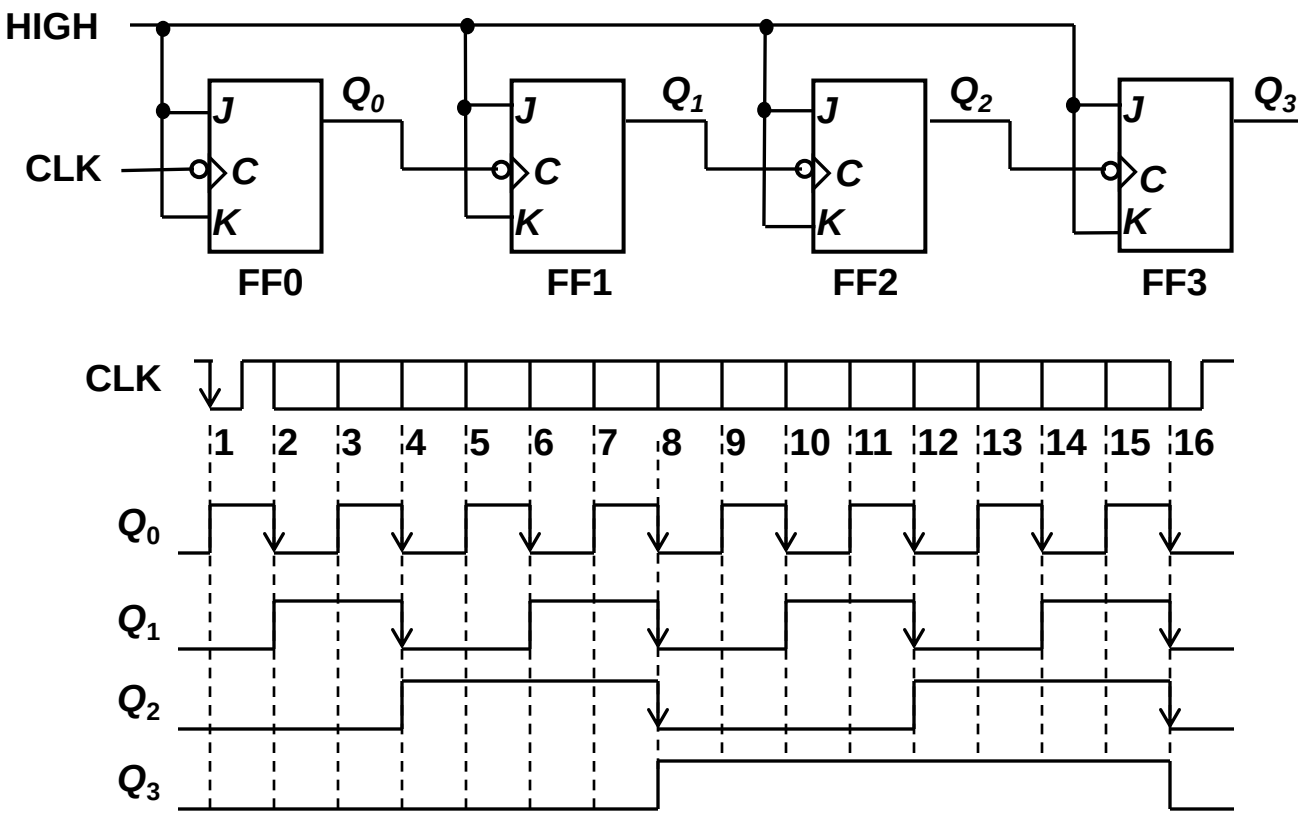

Asyn. Counters with MOD no. < 2^n

- States may be skipped resulting in a truncated sequence.
- Technique: force counter to recycle before going through all of the states in the binary sequence.
- Example: Given the following circuit, determine the counting sequence (and hence the modulus no.)

All *J*, *K* inputs are 1 (HIGH).

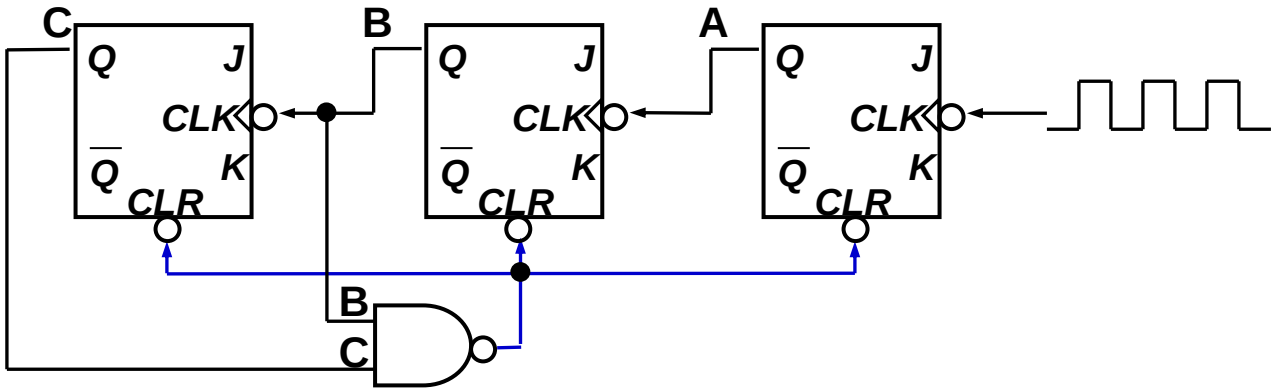

Asyn. Counters with MOD no. < 2^n

- Example (cont'd):

All *J*, *K* inputs are 1 (HIGH).

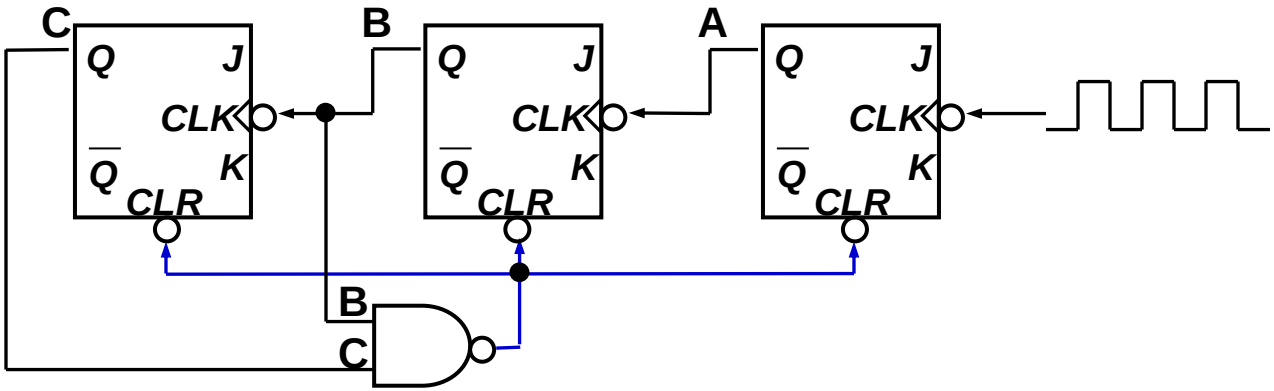

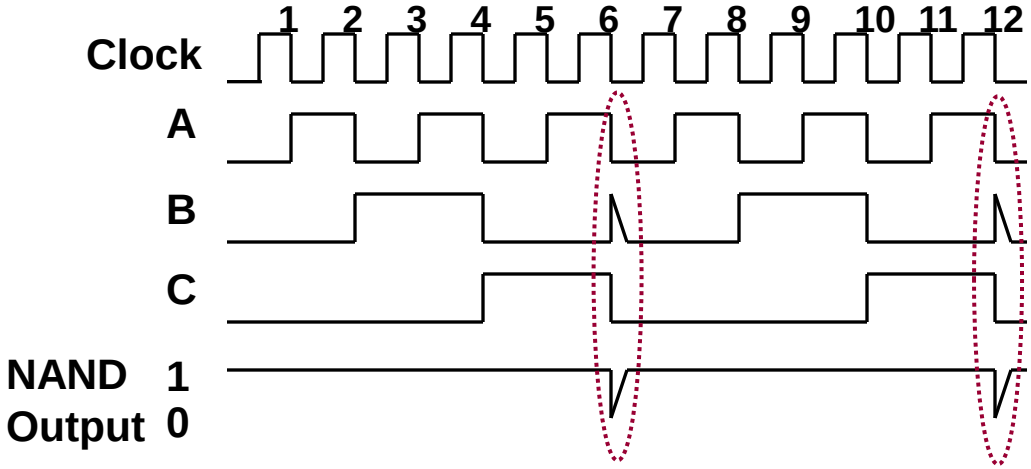

MOD-6 counter produced by clearing (a MOD-8 binary counter) when count of six (110) occurs.

Asyn. Counters with MOD no. < 2^n

- Example (cont'd): Counting sequence of circuit (in CBA order).

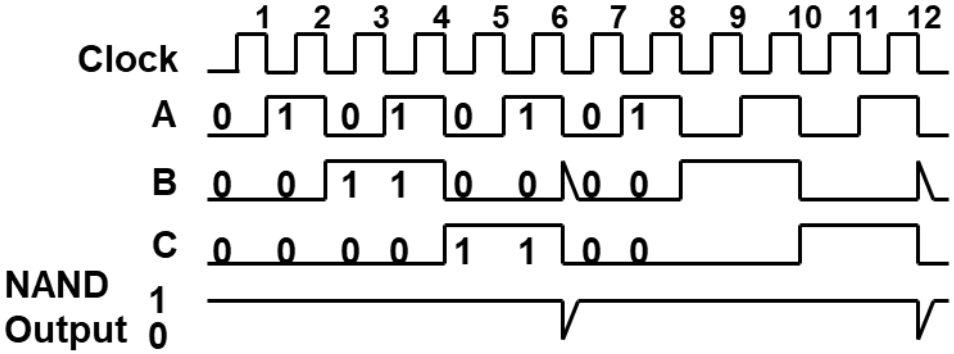

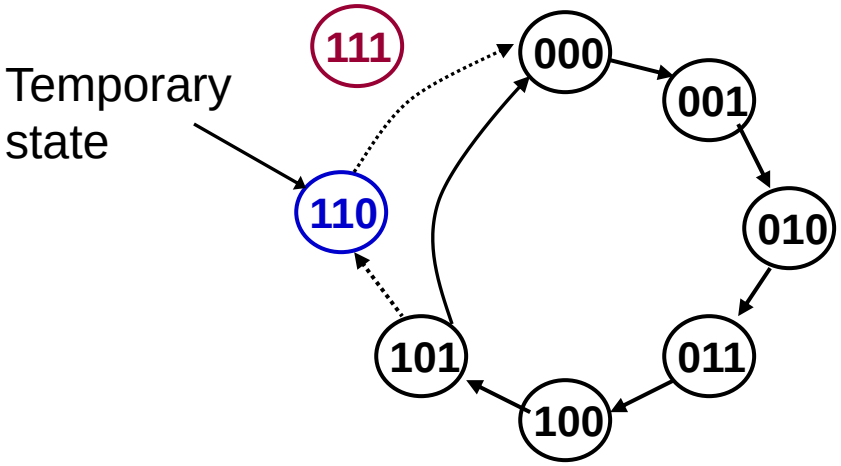

Counter is a MOD-6 counter.

Asyn. Counters with MOD no. < 2^n

- Exercise: How to construct an asynchronous MOD-5 counter? MOD-7 counter? MOD-12 counter?

- Question: The following is a MOD-? counter?

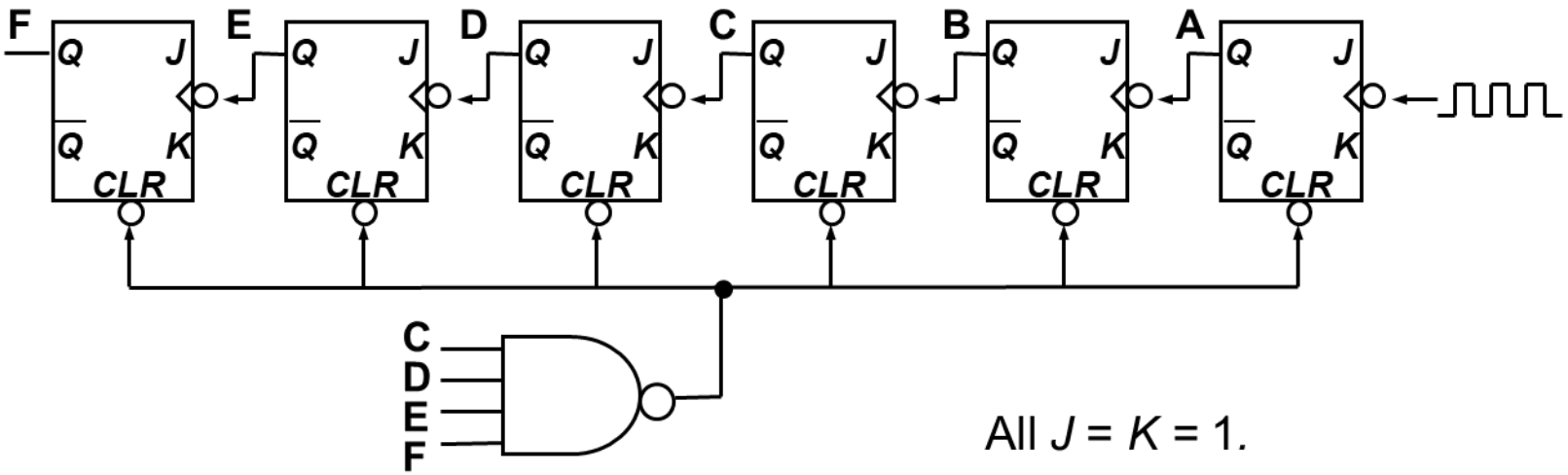

Asyn. Counters with MOD no. < 2^n

- Decade counters (or BCD counters) are counters with 10 states (modulus-10) in their sequence. They are commonly used in daily life (e.g.: utility meters, odometers, etc.).
- Design an asynchronous decade counter.

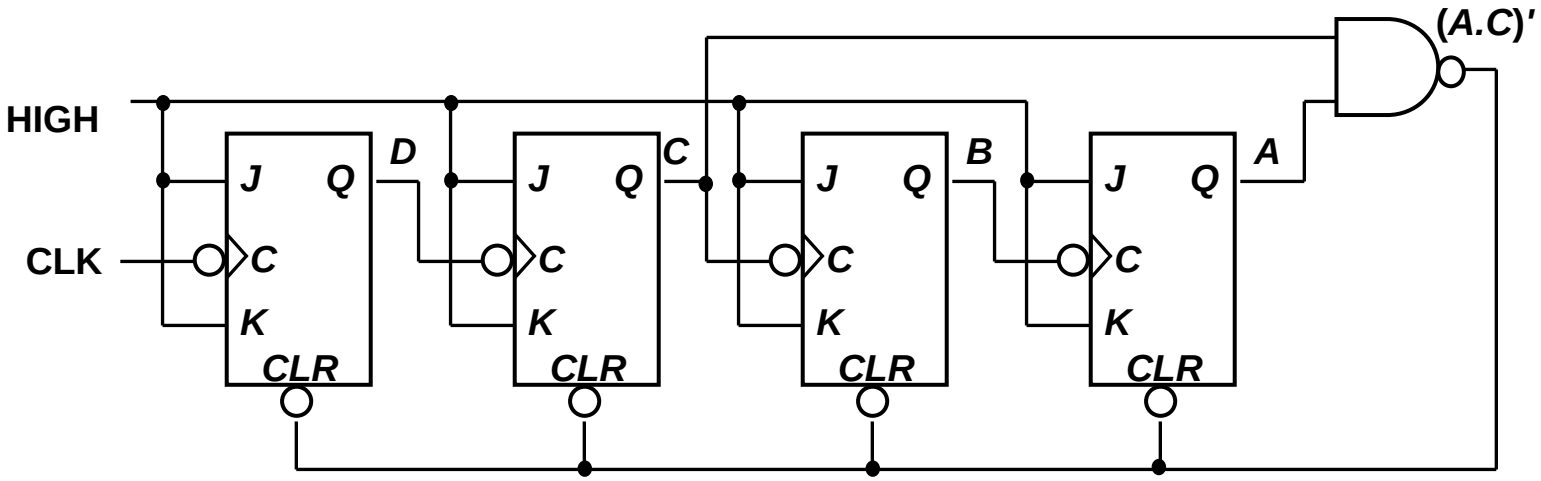

Asyn. Counters with MOD no. < 2^n

- Asynchronous decade/BCD counter (cont'd).

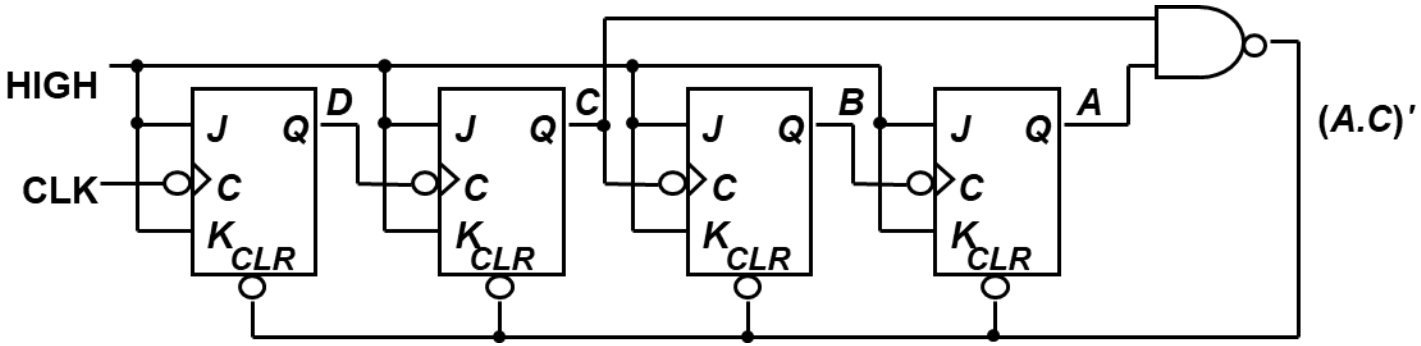

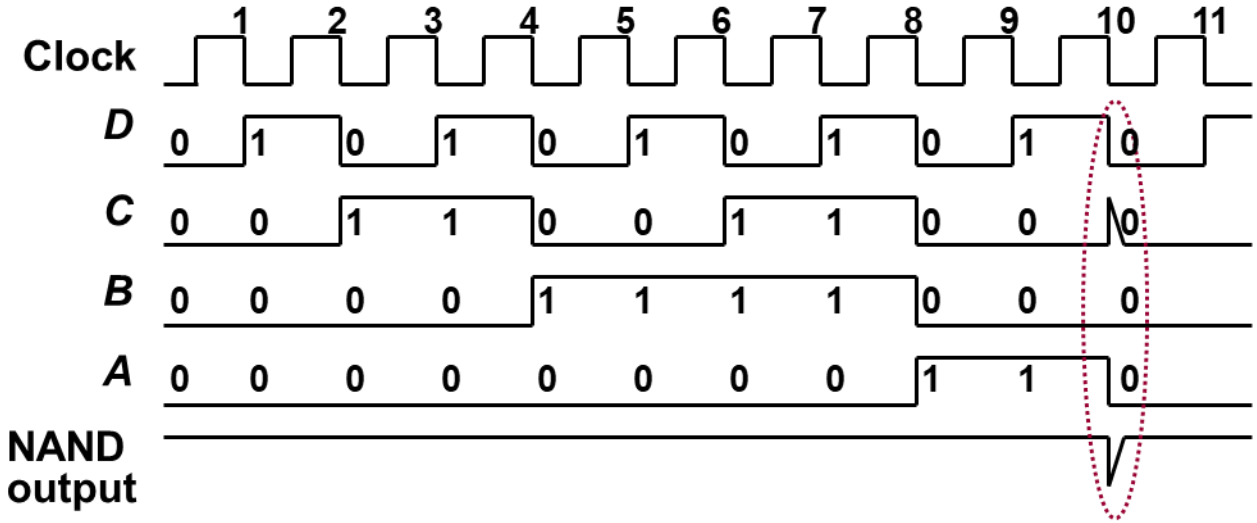

Asynchronous Down Counters

- So far we are dealing with up counters. Down counters, on the other hand, count downward from a maximum value to zero, and repeat.
- Example: A 3-bit binary (MOD-8) down counter.

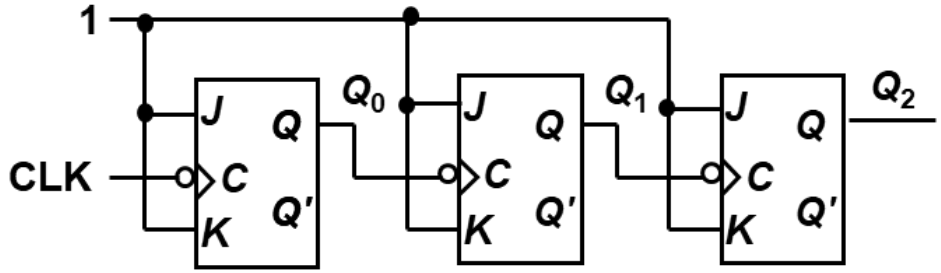

3-bit binary up counter

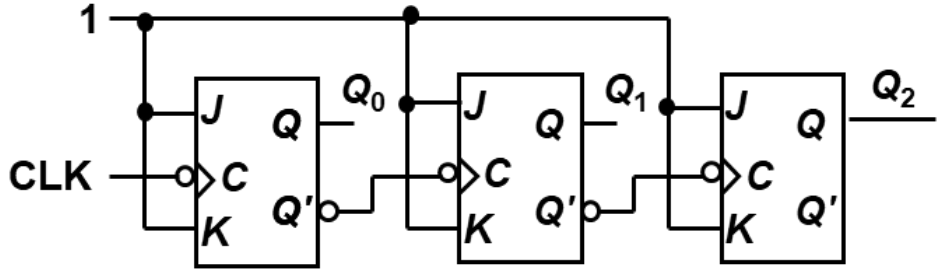

3-bit binary down counter

Asynchronous Down Counters

- Example: A 3-bit binary (MOD-8) down counter.

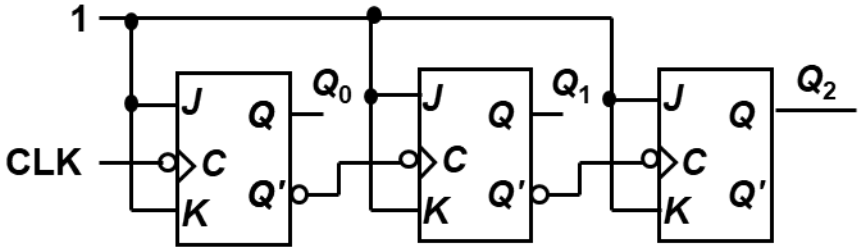

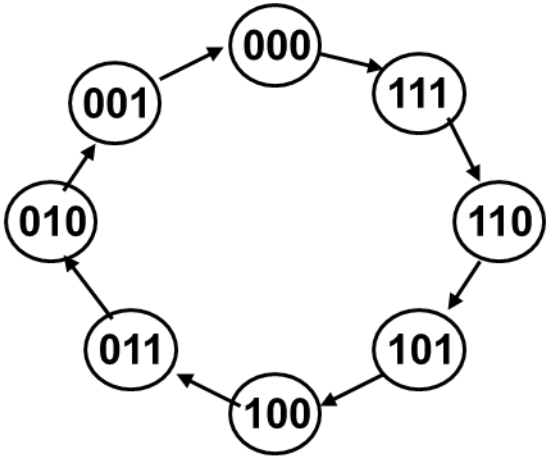

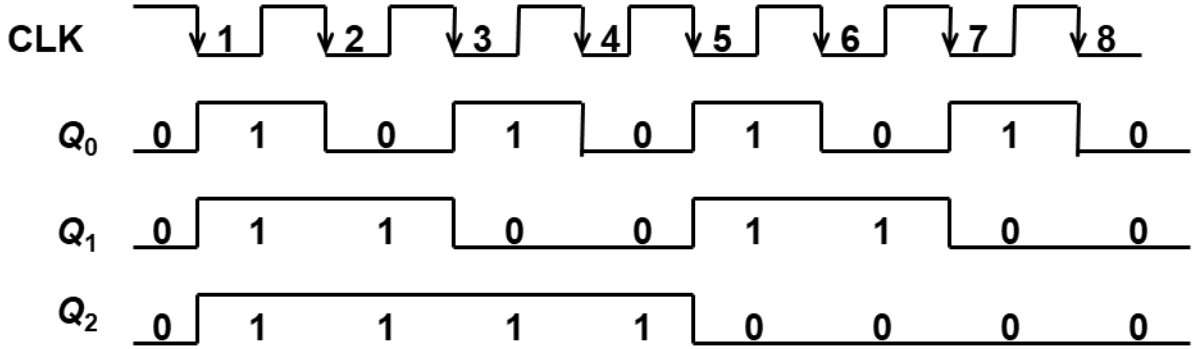

Synchronous Counters

- Synchronous (parallel) counters: the flip-flops are clocked at the same time by a common clock pulse.

- We can design these counters using the sequential logic design process.

- Example: 2-bit synchronous binary counter (using T flip-flops, or JK flip-flops with identical J,K inputs).

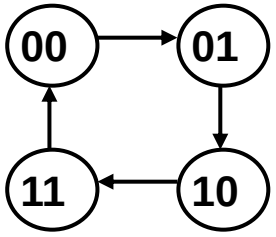

Present state		Next state		Flip-flop inputs	
A_1	A_0	A_1^+	A_0^+	TA_1	TA_0
0	0	0	1	0	1
0	1	1	0	1	1
1	0	1	1	0	1
1	1	0	0	1	1

Synchronous Counters

- Example: 2-bit synchronous binary counter (using T flip-flops, or JK flip-flops with identical J,K inputs).

Present state		Next state		Flip-flop inputs	
A_1	A_0	A_1^+	A_0^+	TA_1	TA_0
0	0	0	1	0	1
0	1	1	0	1	1
1	0	1	1	0	1
1	1	0	0	1	1

$TA_1 = A_0$
$TA_0 = 1$

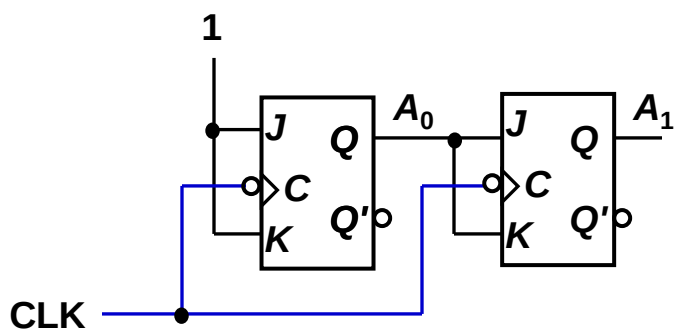

Synchronous Counters

- Example: 3-bit synchronous binary counter (using T flip-flops, or JK flip-flops with identical J, K inputs).

Present state			Next state			Flip-flop inputs		
A_2	A_1	A_0	A_2^+	A_1^+	A_0^+	TA_2	TA_1	TA_0
0	0	0	0	0	1	0	0	1
0	0	1	0	1	0	0	1	1
0	1	0	0	1	1	0	0	1
0	1	1	1	0	0	1	1	1
1	0	0	1	0	1	0	0	1
1	0	1	1	1	0	0	1	1
1	1	0	1	1	1	0	0	1
1	1	1	0	0	0	1	1	1

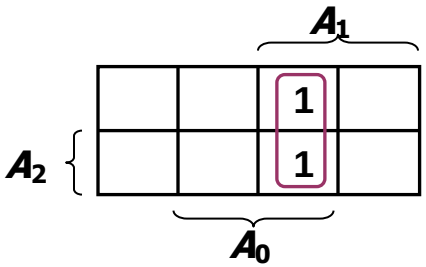

$TA_2 = A_1.A_0$

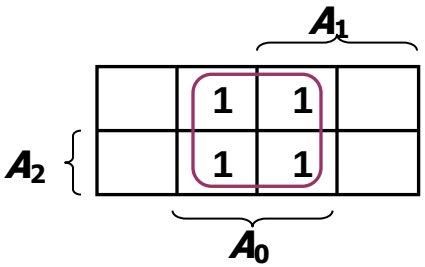

$TA_1 = A_0$

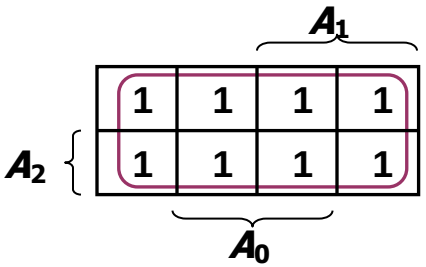

$TA_0 = 1$

Synchronous Counters

- Example: 3-bit synchronous binary counter (cont'd).

$TA_2 = A_1.A_0$ $TA_1 = A_0$ $TA_0 = 1$

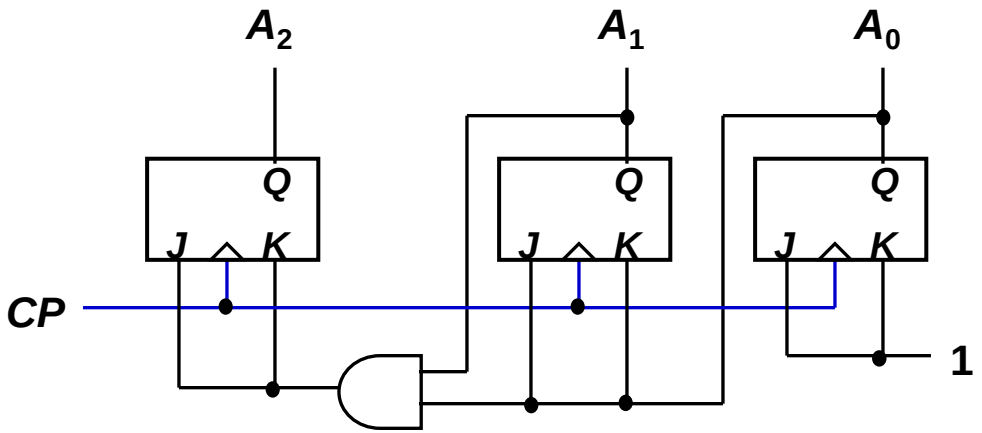

Synchronous Counters

- Note that in a binary counter, the nth bit (shown underlined) is always complemented whenever

$$\underline{0}11\ldots11 \rightarrow \underline{1}00\ldots00$$

$$\text{or} \quad \underline{1}11\ldots11 \rightarrow \underline{0}00\ldots00$$

- Hence, X_n is complemented whenever

$$X_{n-1}X_{n-2} \ldots X_1X_0 = 11\ldots11.$$

- As a result, if T flip-flops are used, then

$$TX_n = X_{n-1} \cdot X_{n-2} \cdot \ldots \cdot X_1 \cdot X_0$$

Synchronous Counters

- Example: 4-bit synchronous binary counter.

$$TA_3 = A_2 \,.\, A_1 \,.\, A_0$$

$$TA_2 = A_1 \,.\, A_0$$

$$TA_1 = A_0$$

$$TA_0 = 1$$

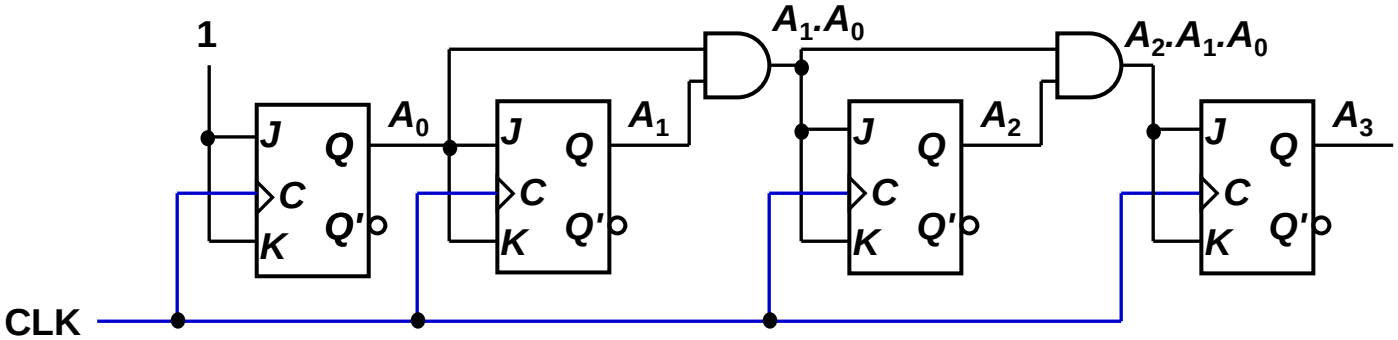

Synchronous Counters

- Example: Synchronous decade/BCD counter.

Clock pulse	Q_3	Q_2	Q_1	Q_0
Initially	0	0	0	0
1	0	0	0	1
2	0	0	1	0
3	0	0	1	1
4	0	1	0	0
5	0	1	0	1
6	0	1	1	0
7	0	1	1	1
8	1	0	0	0
9	1	0	0	1
10 (recycle)	0	0	0	0

$T_0 = 1$

$T_1 = Q_3'.Q_0$

$T_2 = Q_1.Q_0$

$T_3 = Q_2.Q_1.Q_0 + Q_3.Q_0$

Synchronous Counters

- Example: Synchronous decade/BCD counter (cont'd).

$$T_0 = 1$$
$$T_1 = Q_3'.Q_0$$
$$T_2 = Q_1.Q_0$$
$$T_3 = Q_2.Q_1.Q_0 + Q_3.Q_0$$

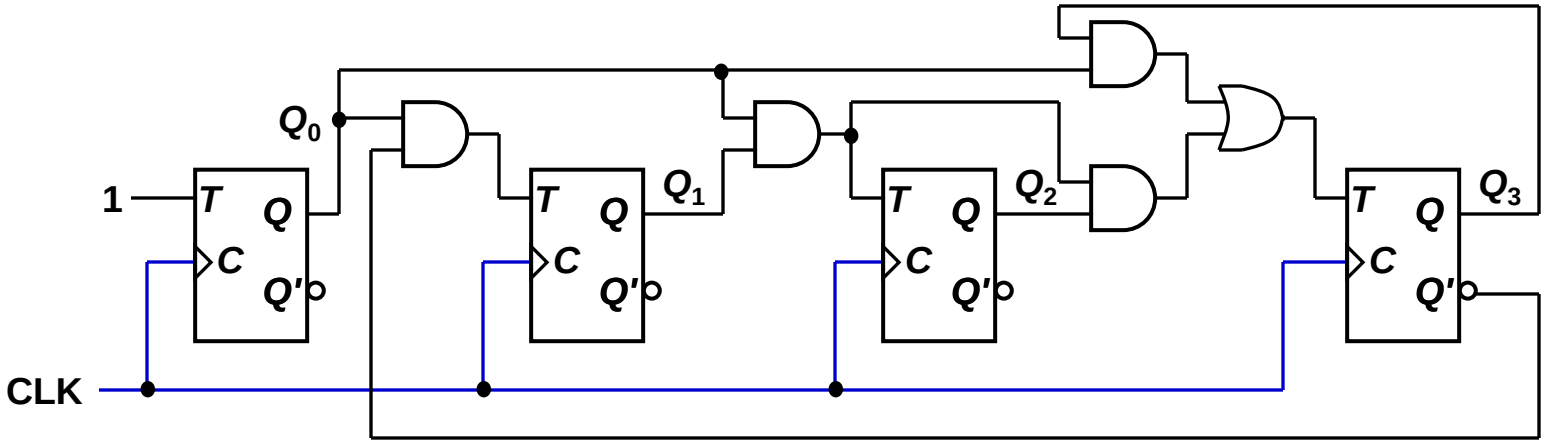

Up/Down Synchronous Counters

- Up/down synchronous counter: a bidirectional counter that can count either up or down.

- An input (control) line Up/Down (or simply Up) specifies the direction of counting.

  Up/Down = 1 $\rightarrow$ Count upward

  Up/Down = 0 $\rightarrow$ Count downward

Up/Down Synchronous Counters

- Example: A 3-bit up/down synchronous binary counter.

Clock pulse	*Up*	Q_2	Q_1	Q_0	*Down*
0		0	0	0	
1		0	0	1	
2		0	1	0	
3		0	1	1	
4		1	0	0	
5		1	0	1	
6		1	1	0	
7		1	1	1	

$TQ_0 = 1$

$TQ_1 = (Q_0.Up) + (Q_0'.Up')$

$TQ_2 = (Q_0.Q_1.Up) + (Q_0'.Q_1'.Up')$

Up counter	Down counter
$TQ_0 = 1$	$TQ_0 = 1$
$TQ_1 = Q_0$	$TQ_1 = Q_0'$
$TQ_2 = Q_0.Q_1$	$TQ_2 = Q_0'.Q_1'$

Decoding A Counter

- Decoding a counter involves determining which state in the sequence the counter is in.

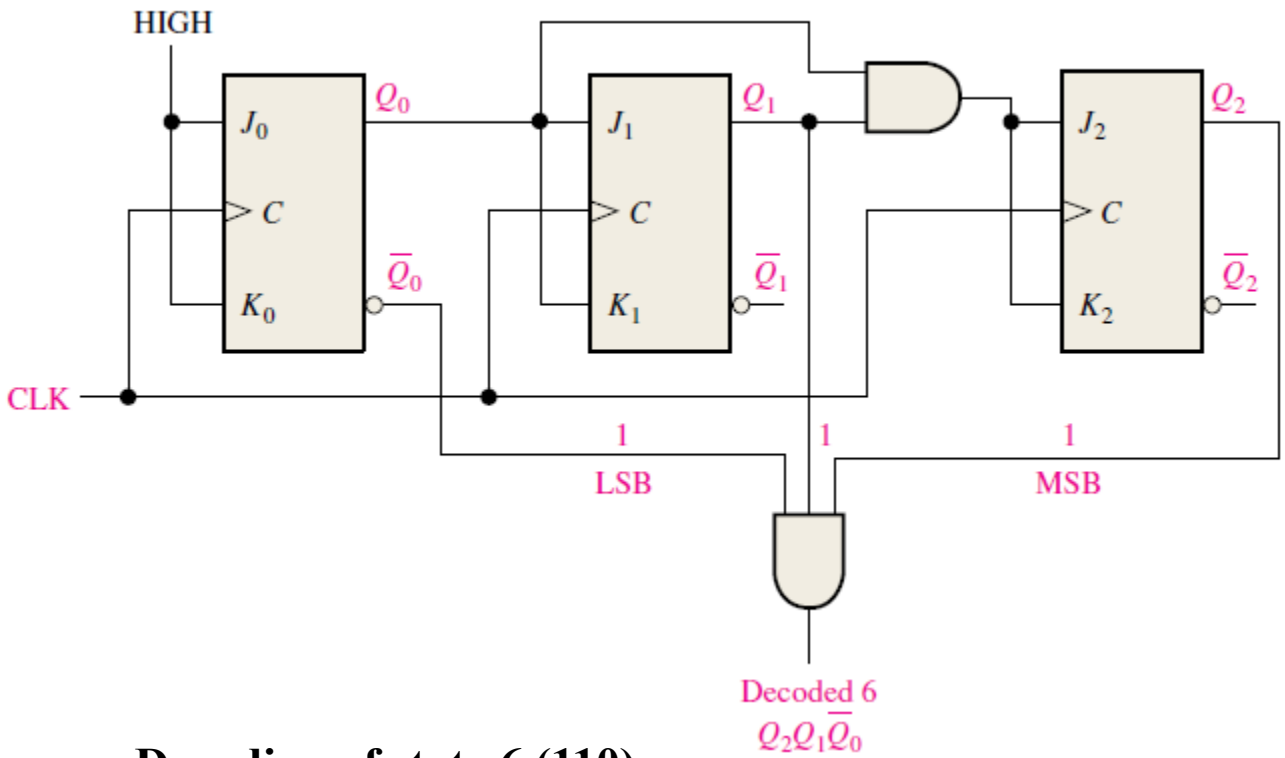

Decoding of state 6 (110).

Decoding A Counter

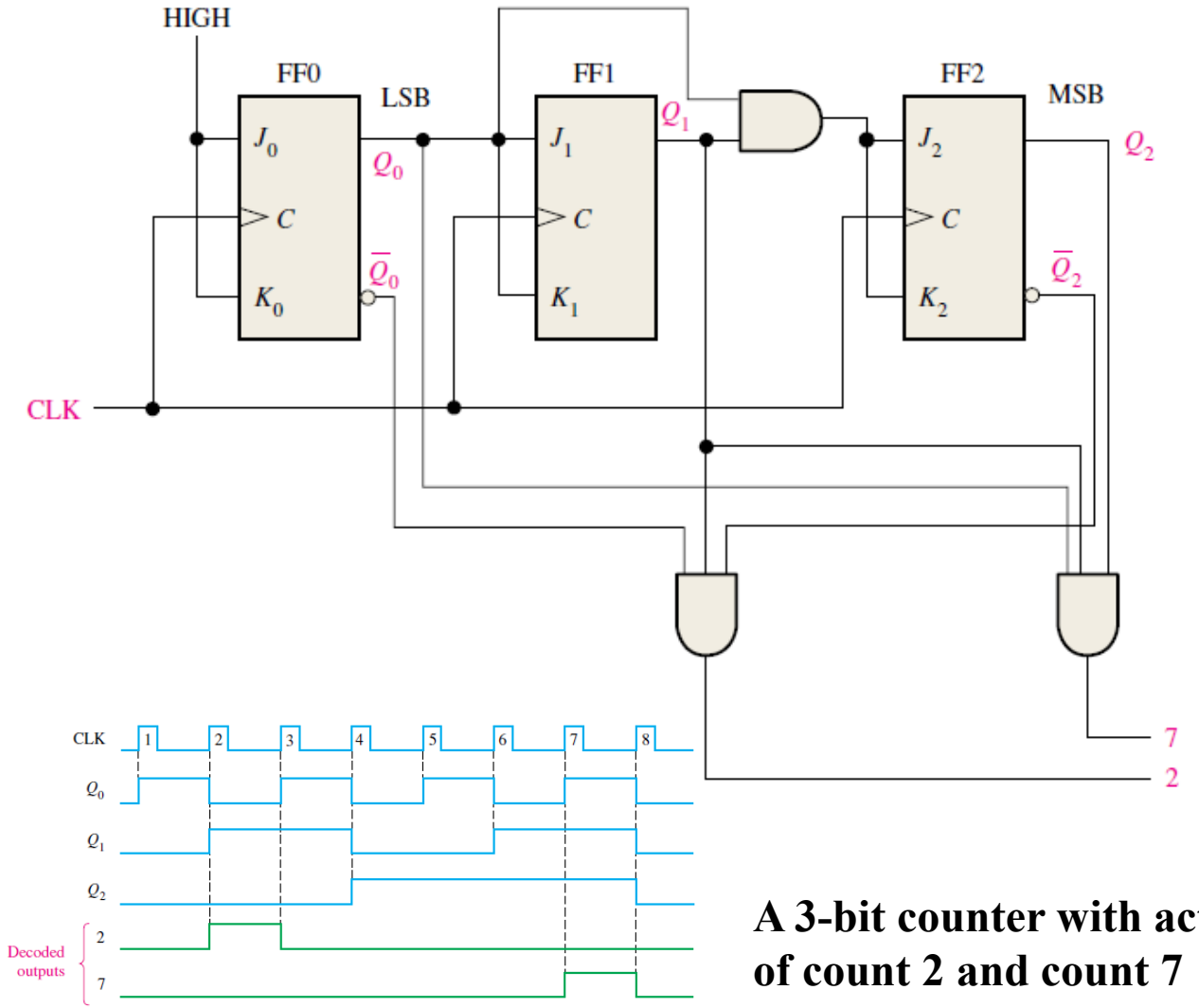

A 3-bit counter with active-HIGH decoding of count 2 and count 7

Counters with Parallel Load

- Counters could be augmented with parallel load capability for the following purposes:
  - To start at a different state
  - To count a different sequence
  - As more sophisticated register with increment/decrement functionality.

Counters with Parallel Load

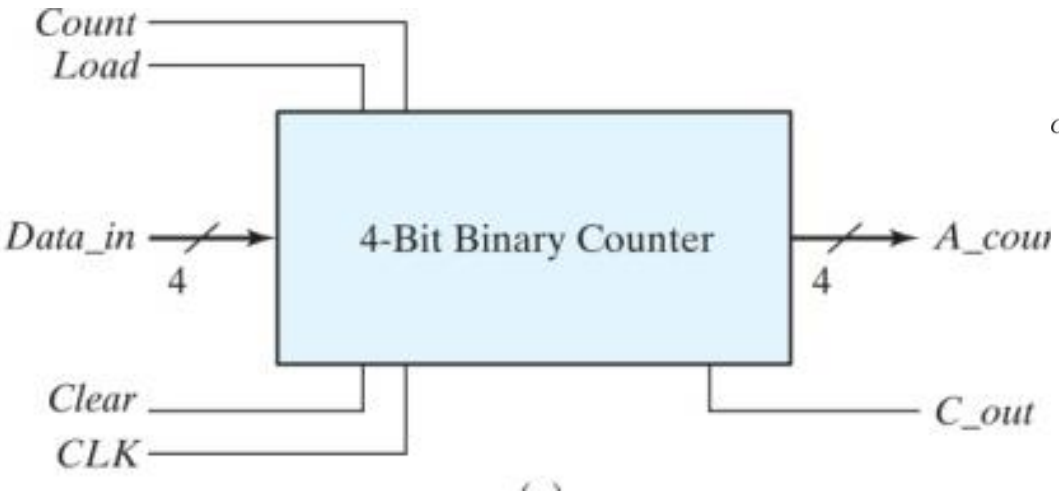

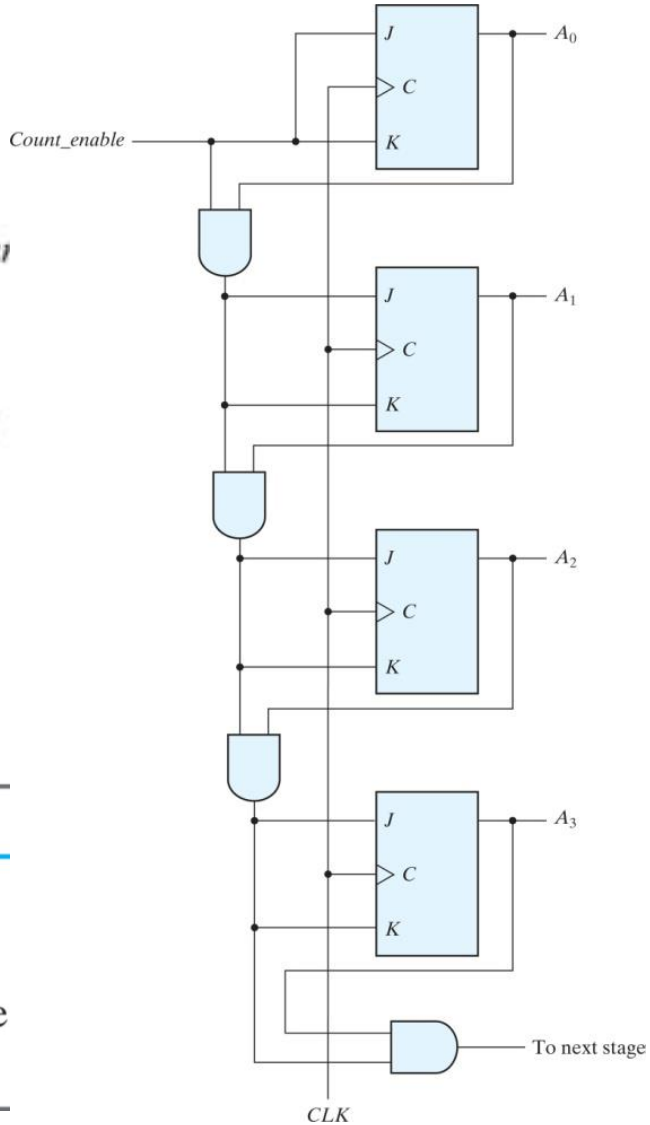

Clear	CLK	Load	Count	Function
0	X	X	X	Clear to 0
1	↑	1	X	Load inputs
1	↑	0	1	Count next binary state
1	↑	0	0	No change

Counters with Parallel Load

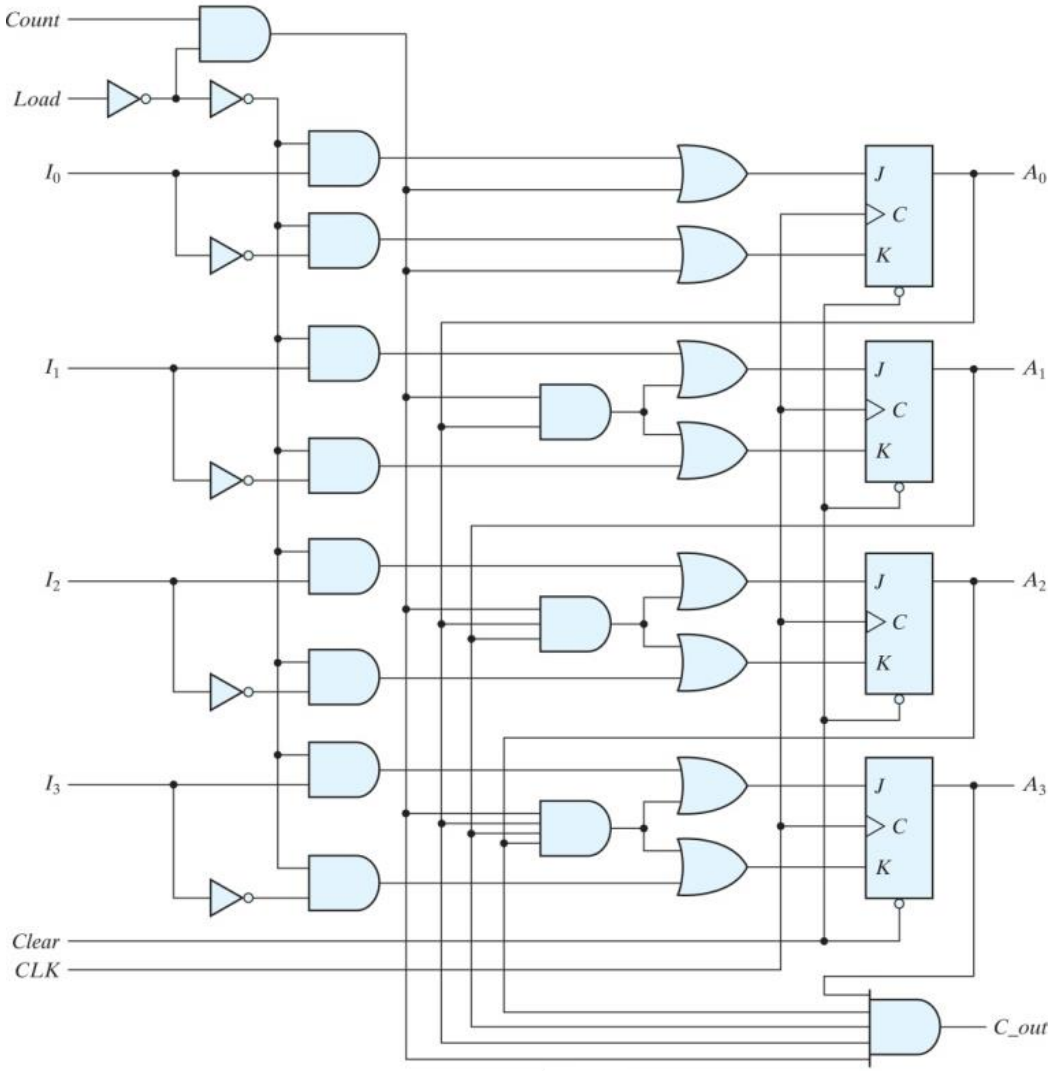

Cascading Asynchronous Counters

- Larger asynchronous (ripple) counter can be constructed by cascading smaller ripple counters.
- Connect last-stage output of one counter to the clock input of next counter to achieve higher-modulus operation.
- Example: A modulus-32 ripple counter constructed from a modulus-4 counter and a modulus-8 counter.

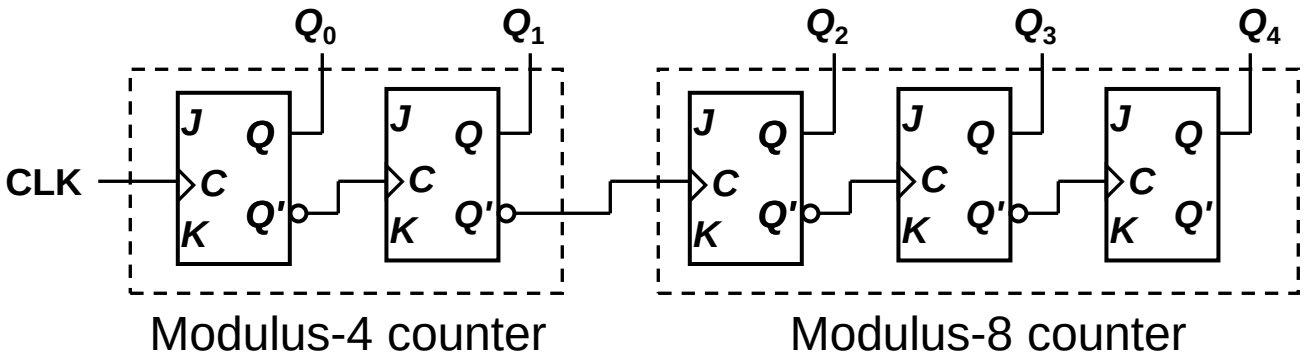

Cascading Asynchronous Counters

- Example: A 6-bit binary counter (counts from 0 to 63) constructed from two 3-bit counters.

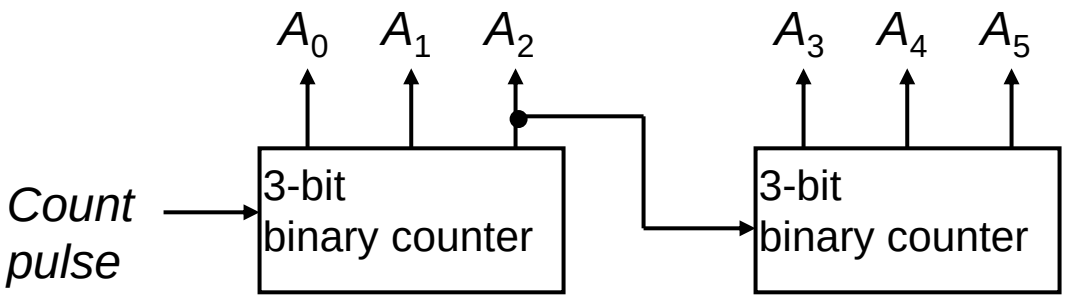

A_5	A_4	A_3	A_2	A_1	A_0
0	0	0	0	0	0
0	0	0	0	0	1
0	0	0	:	:	:
0	0	0	1	1	1
0	0	**1**	0	0	0
0	0	1	0	0	1
:	:	:	:	:	:

Cascading Synchronous Counters

- If counter is a not a binary counter, requires additional output.
- Example: A modulus-100 counter using two-decade counters.

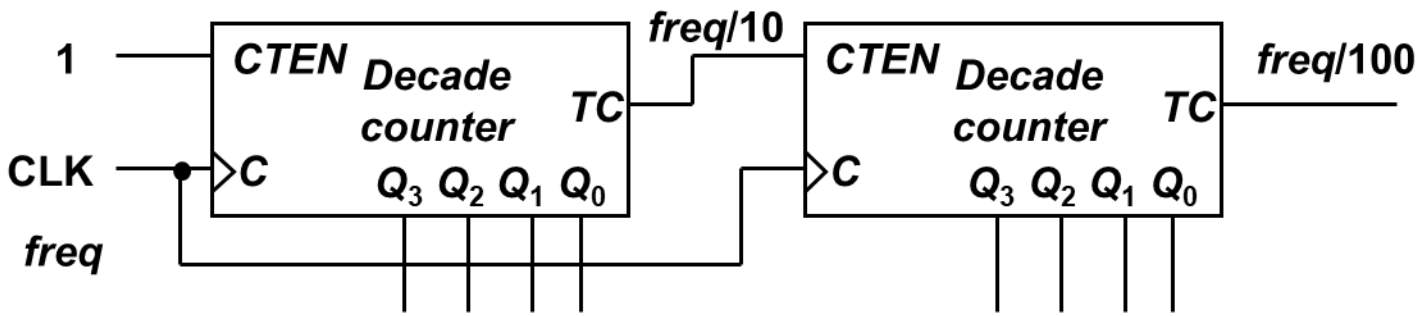

***TC* = 1 when counter recycles to 0000**

- CTEN---Counter Enable, TC= Terminal Count

References

- Chapter 9, Digital Fundamentals by Thomas L. Floyd

- Chapter 6, Digital Design by M. Morris Mano

- Disclaimer: I don’t own all the slides, these slides are copied and adopted from various public resources available on the internet.

Thank you!!!